$LPCO_2$ Component Description

Ball Valve, Stainless Steel (with Limit Switch)

CHEMETRON
Fire Systems™

C-64-110 Rev AB

FEATURES

- ***FM Approved for LPCO2 Service***
- ***NEMA 4, 4X***

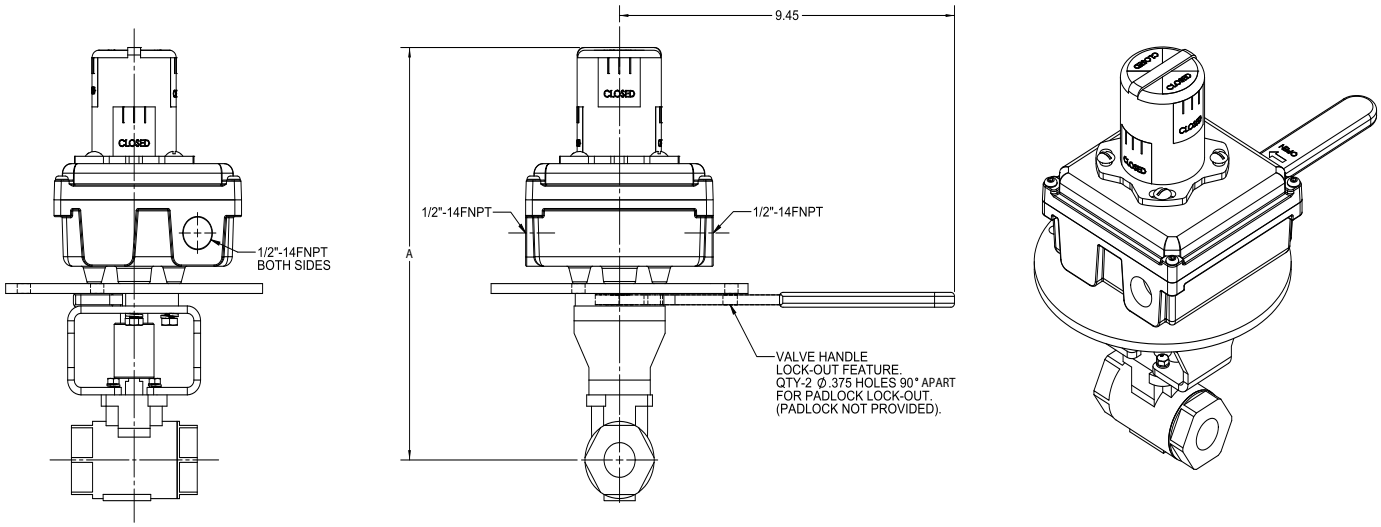

Ordering Information

Valve Size	Assembly Part Number	Ball Valve Part Number	Dimension A (inches)	Assembly Weight (pounds)
1/4"	70610940	70610933	9.60	8.0
1/2"	70610941	70610934	9.60	8.0
3/4"	70610942	70610935	9.76	9.0
1"	70610943	70610936	10.44	10.0
1-1/4"	70610944	70610937	10.57	11.0
1-1/2"	70610945	70610938	11.12	12.5
2"	70610946	70610939	11.30	14.6

LIMIT SWITCH MATERIALS:

- Aluminum Enclosure With Ultra Low Copper Content (0.2%)

Limit Switch:

- SPDT, Form C (normally open)
- 15A, 125/250 V AC
- 6 A/24 V DC
- 0.5A/125 V DC
- 0.25A/250 V DC

Reference Data Sheets:

- C-64-100 (w/o LS)
- C-64-120 (fitted with explosion-proof LS)

Jurisdiction: EAR; ECCN: 2B999.g

This literature is provided for informational purposes only. Chemetron Fire Systems assumes no responsibility for the product's suitability for a particular application. The product must be properly applied to work correctly. If you need more information on this product, or if you have a particular question, contact Chemetron Fire Systems.

Chemetron and Chemetron Fire Systems are trademarks of Kidde-Fenwal, Inc. All other trademarks are the property of their respective owners.

Kidde Fire Systems
400 Main Street
Ashland, MA 01721
Ph: 508.881.2000
Fax: 508.881.8920
www.kiddefiresystems.com

©2015 Kidde-Fenwal, Inc.